Line drawing of the item (with outline dimensions)

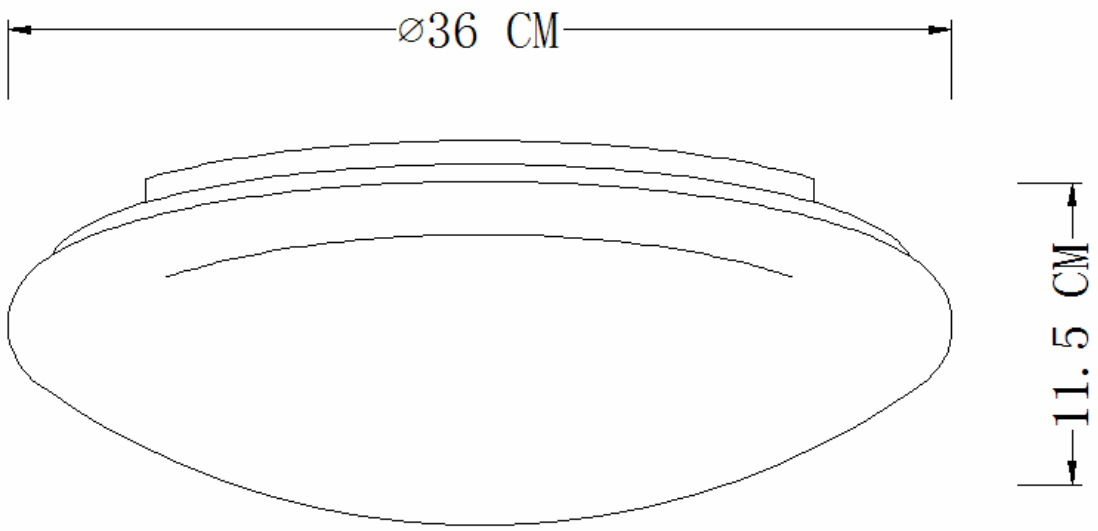

Item number: 79164/18/61

Installation drawing (the same as it in its instruction manual)

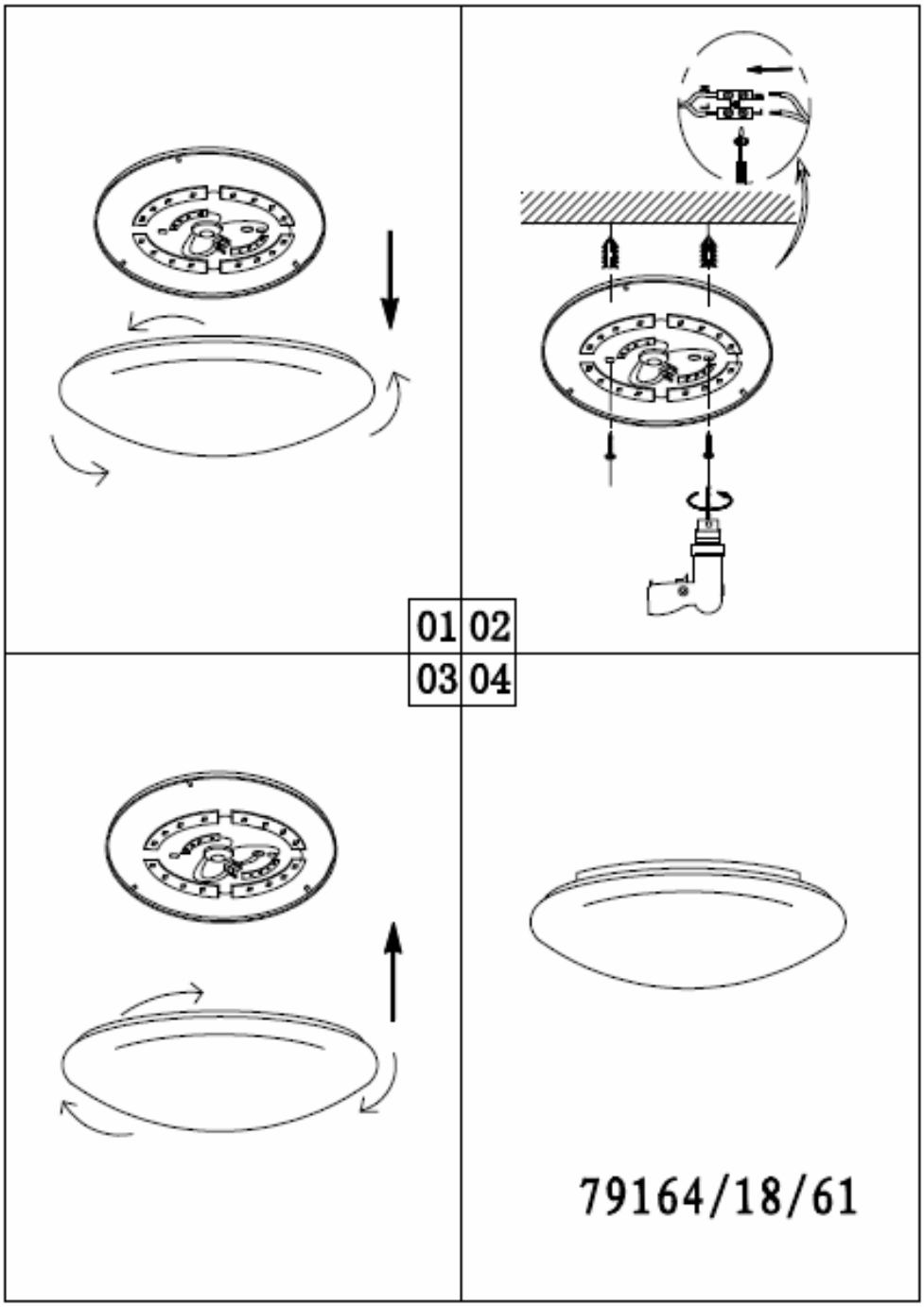

Technical details

materials used:		Metal+Acrylic
color:		WHITE
dimmable and how is the fixture dimmable:		
size:	Height: Length: Width: Net Weight:	11.5CM Φ36CM 0.82kg
power requirements:		220V-240V~50Hz
bulb type and maximum Wattage:		LED Max.18W
number of bulbs:		36*0.5W SMD
IP degree:		IP21

EES label (only one in English, vertical)

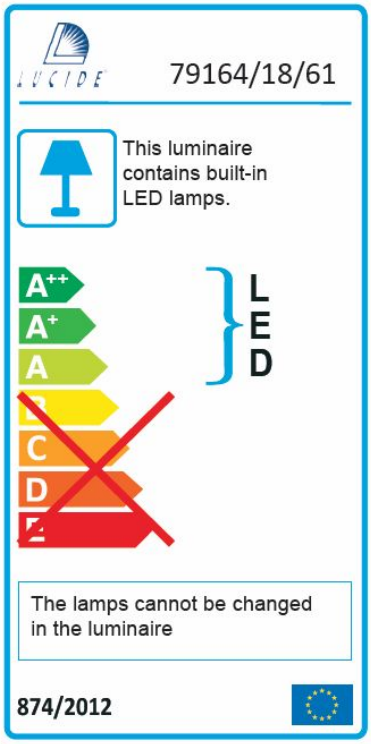

Lucide NV
Bisschoppenhoflaan 145
2100 Deurne
Belgium
info@lucide.be
tel: +32 (0)3 366 22 04
www.lucide.be