Line drawing of the item

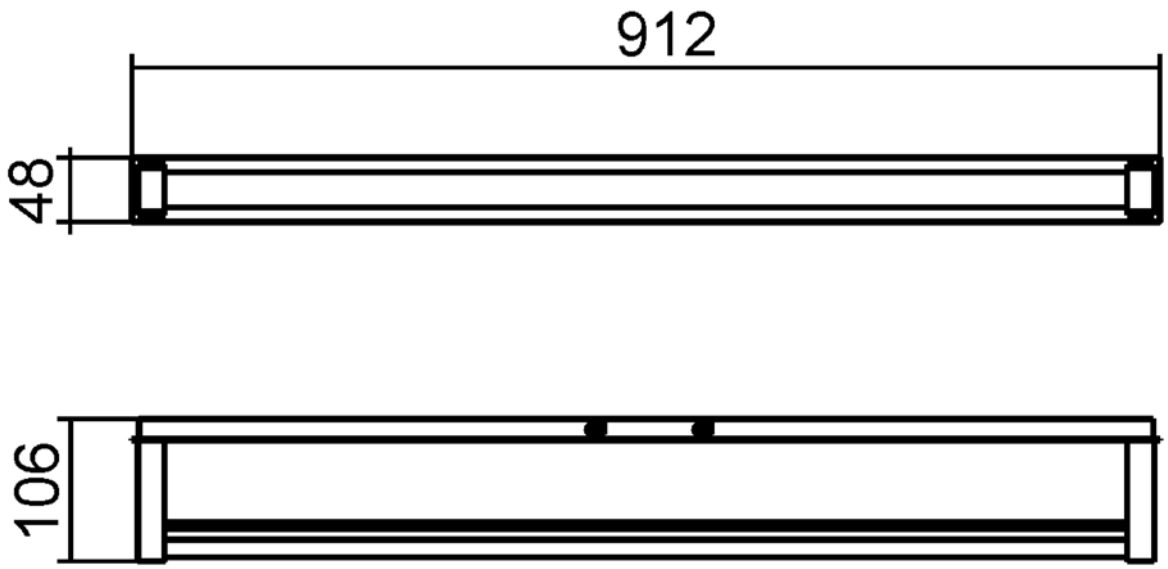

Item number : 39211/14/11

Installation drawing

1

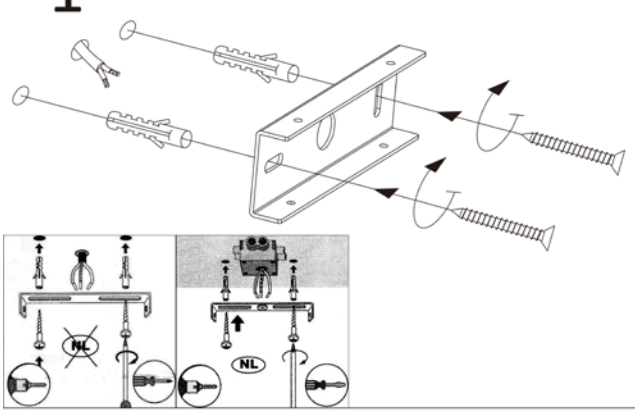

2

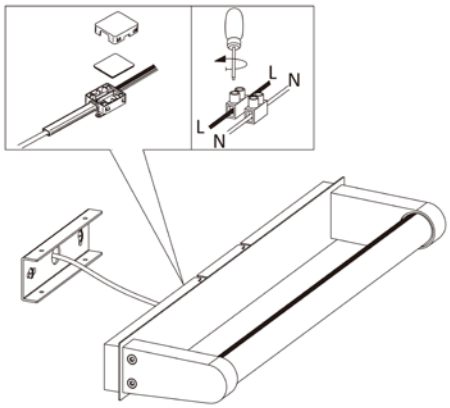

3

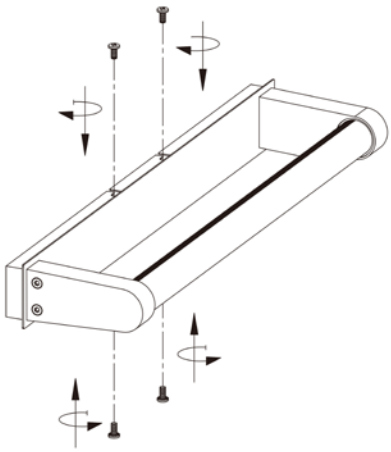

4

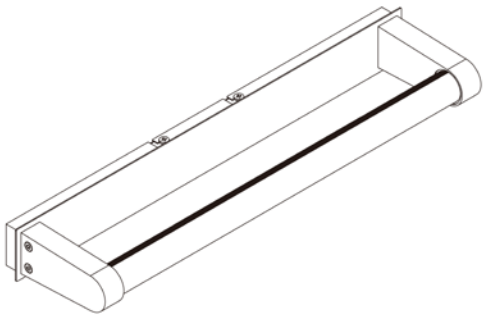

Technical details

materials used:		Metal
color:		Shiny chrome
dimmable and how is the fixture dimmable:		
size:	Height: Length: Width: Net Weight:	10.6 cm 91.2 cm 4.8 cm 1.28 kg
power requirements:		220-240V 50Hz
bulb type and maximum Wattage:		T8 LED 14W
number of bulbs:		1xT8 LED
IP degree:		IP44

EES label

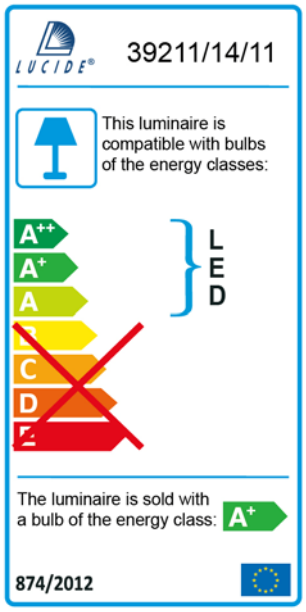

Lucide NV
Bisschoppenhoflaan 145
2100 Deurne
Belgium
info@lucide.be
tel: +32 (0)3 366 22 04
www.lucide.be